SHINSHIN CENTRIFUGAL PROCESS PUMP

EHP

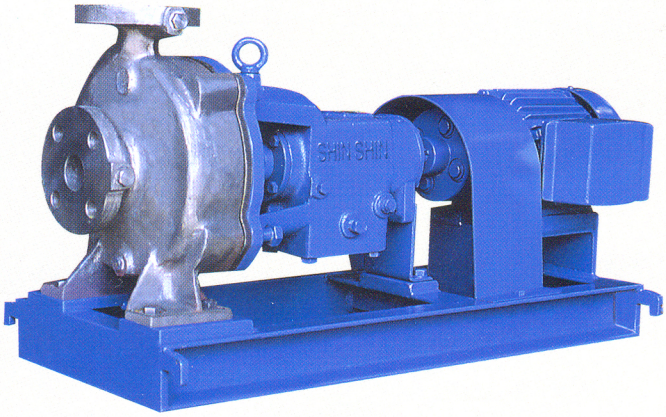

SHIN SHIN
MACHINERY CO., LTD.

LLOYD'S REGISTER QUALITY ASSURANCE ISO9001

UKAS QUALITY MANAGEMENT

Certificate NO. 942848

EHP Series

횡축, 단단, 볼류트 케이싱 원심 프로쎄스 펌프, 푸트마운트형

Horizontal, Single Stage, Volute Casing Centrifugal Process Pumps, Foot Mounted Type

10 Bar급

PN 10 Bar

용도 및 적용 분야

화학, 석유화학, 정유공업분야 등의 경부하용 프로쎄스에 사용된다.

Usages and applications

For light duty process services in the chemical and petrochemical industries, refineries etc.

설계 및 구조적 특징

1. 광범위한 사용 영역
2. 임펠러 후방 취출 구조
3. 플랜지는 KS 또는 JIS10Kg/㎠급, FF.
4. 동평형된 임펠러.
5. 5200 및 7300 계열의 베어링 사용, 오일 배쓰식 윤활.
6. 무냉각 스터핑 박스, 팩킹링 또는 미케니칼 씨일.
7. 베어링 하우징에 냉각 쟈켓 부착.
8. 구동측에서 보아 우회전.

Design and operation features

1. Wider hydraulic coverage.
2. Impeller back pull-out arrangement.
3. Flanges are KS or JIS 10Kg/㎠ ratings, FF.
4. Dynamically balanced impeller.
5. 5200 and 7300 series bearing, Oil bath lubrication.
6. Uncooled stuffing box, Packing rings or mechanical seal.
7. Cooling jacketed bearing housing.
8. Clockwise (CW)rotation when viewed from the driver end.

형식 표시 방법

Type nomenclature

EHP-50B

- 씨리즈 (Series)
- 싸이즈/흡입공칭구경(Size/Nominal dia. of suction nozzle)
- 양정 등급 (Head ratings): A,B,C·····

선정표(60Hz에서)

Performance selection chart(60Hz)

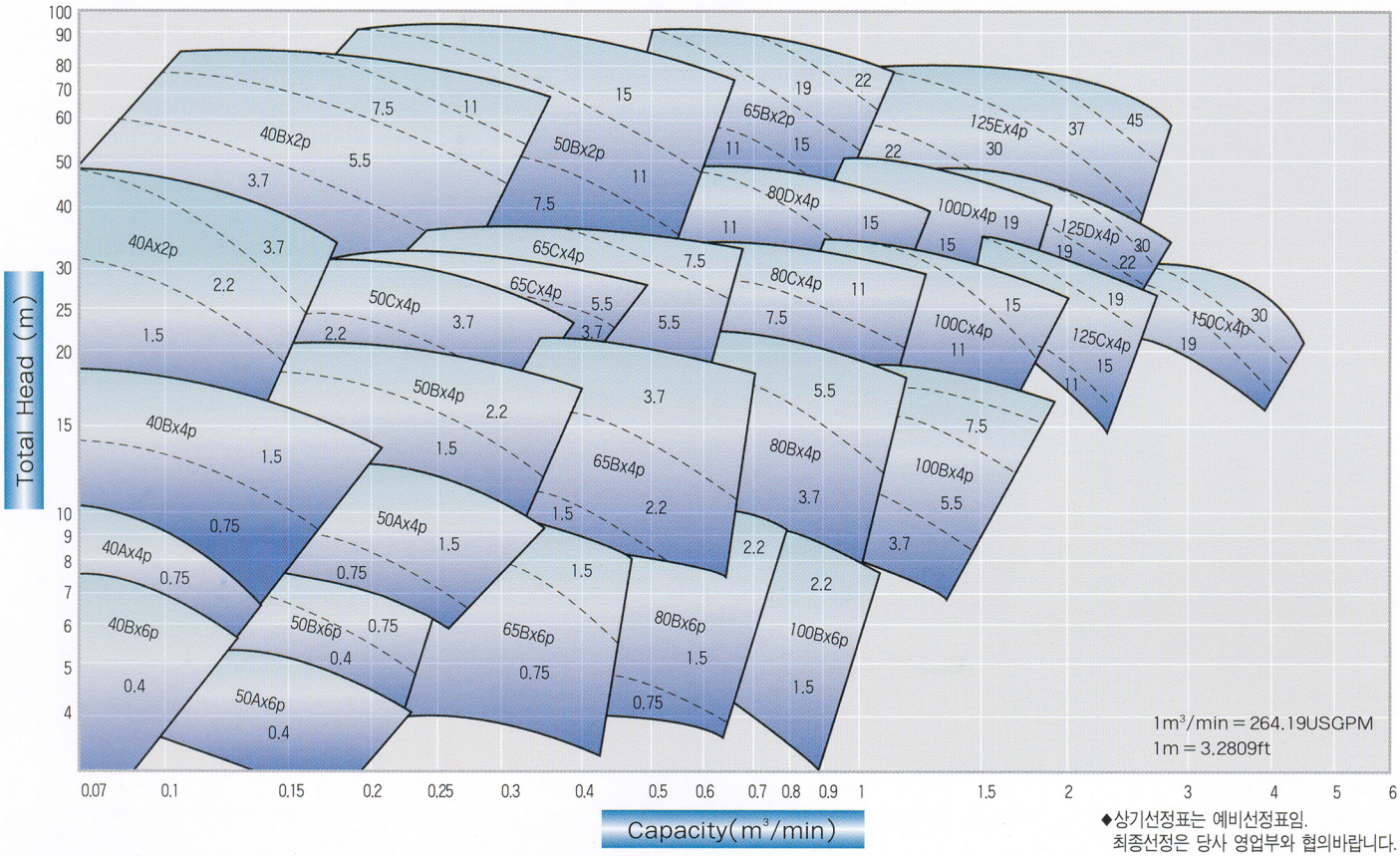

◆상기선정표는 예비선정표임.
최종선정은 당사 영업부와 협의바랍니다.

기초자료

Principle particulars

MODEL	BORE.		SHAFT SEALING SIZE			BEARING NO.	
	SUC.	DIS.	PACKING	M.SEAL(UBA) BA	M.SEAL(UBA) UBA	RADIAL	THRUST
EHP 40A	ø 40	ø 32	ø 25x ø 50	ø 30	ø 25	#5205	#7305BDB
EHP 40B			ø 30x ø 50	ø 35	ø 30	#5206	#7306BDB
EHP 50B	ø 50	ø 40					
EHP 50C			ø 35x ø 60	ø 40	ø 35	#5208	#7308BDB
EHP 65B	ø 65	ø 50	ø 30x ø 50	ø 35	ø 30	#5206	#7306BDB
EHP 65C			ø 35x ø 60	ø 40	ø 35	#5208	#7308BDB
EHP 80B	ø 80	ø 65	ø 30x ø 50	ø 35	ø 30	#5206	#7306BDB
EHP 80C			ø 40x ø 65	ø 45	ø 40	#5208	#7308BDB
EHP 80D							
EHP 100B	ø 100	ø 80	ø 50x ø 75	ø 55	ø 50	#5209	#7309BDB
EHP 100C			ø 40x ø 65	ø 45	ø 40	#5208	#7308BDB
EHP 100D							
EHP 125C	ø 125	ø 100					
EHP 125E			ø 55x ø 80	ø 60	ø 55	#5211	#7311BDB
EHP 150C	ø 150	ø 125	ø 40x ø 65	ø 45	ø 40	#5208	#7308BDB
EHP 150D			ø 55x ø 80	ø 60	ø 55	#5211	#7311BDB
EHP 150E							

EHP Series

조립단면도 Sectional drawing

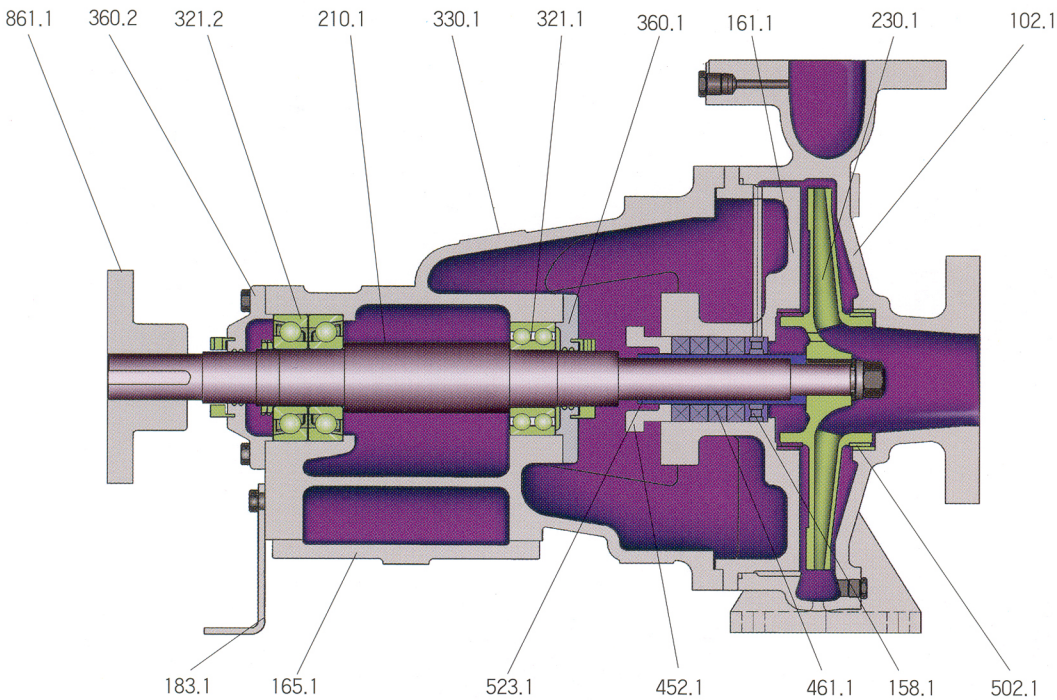

NO.	PART NAME	MATERIAL								Q'ty
		CLASS 1	CLASS 2	CLASS 3	CLASS 4	CLASS 5	CLASS 6	CLASS 7	CLASS 8	
102.1	VOLUTE CASING	GC 200	GC 250	BC 6	SSC 13	SSC 14	SSC 16	GCD 450	SC 46	1
161.1	CASING COVER	GC 200	GC 250	BC 6	SSC 13	SSC 14	SSC 16	GCD 450	SC 46	1
165.1	JACKET COVER	GC 200								1
183.1	SUPPORT	SS 400								1
210.1	SHAFT	SM 45C/STS 304		STS 304		STS 316	STS 316L	STS 304		1
230.1	IMPELLER	GC 200/BC 6 /SSC 13		PBC2/ALBC3	SSC13	SSC14	SSC16	SSC13		1
321.1	BALL BEARING	STB 2								1
321.2	BALL BEARING	STB 2								1
330.1	BEARING HOUSING	GC 200								1
360.1	BEARING COVER(INNER)	GC 200								1
360.2	BEARING COVER(OUTTER)	GC 200								1
*433.1	MECHANICAL SEAL	-								1
452.1	PACKING GLAND	GC 200	GC 200	BC 6	SSC 13	SSC 14	SSC 16	GC 200	GC 200	1
158.1	LANTERN RING	BC 6	BC 6	BC 6	SSC 13	SSC 14	SSC 16	BC 6	SSC 13	1SET
461.1	PACKING	NON METALLIC								1
*471.1	SEAL COVER	STS 304	STS 304	STS 304	STS 304	STS 316	STS 316L	STS 304	STS 304	1
502.1	CASING WEAR RING	BC 6/SSC 13		PBC2/ALBC3	SSC 13	SSC 14	SSC 16	SSC 13		1
523.1	SHAFT SLEEVE	STS 304				STS 316	STS 316L	STS 304		1
861.1	COUPLING	GC 200								1

*OPTION

외형 치수도

Outline dimensions

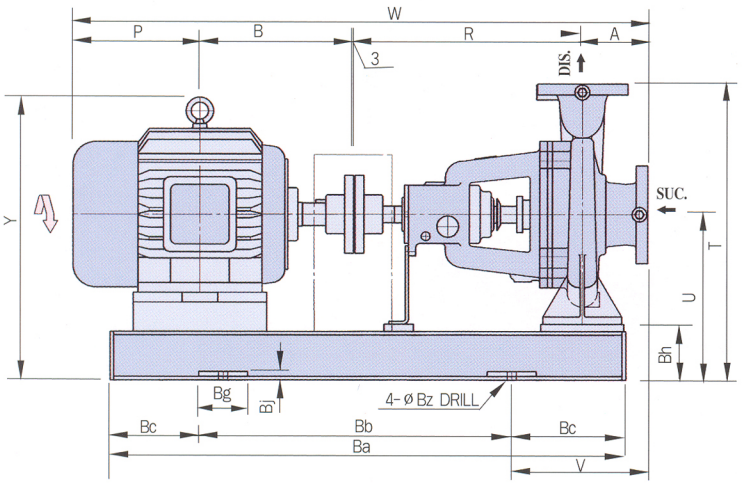

Fig "A"

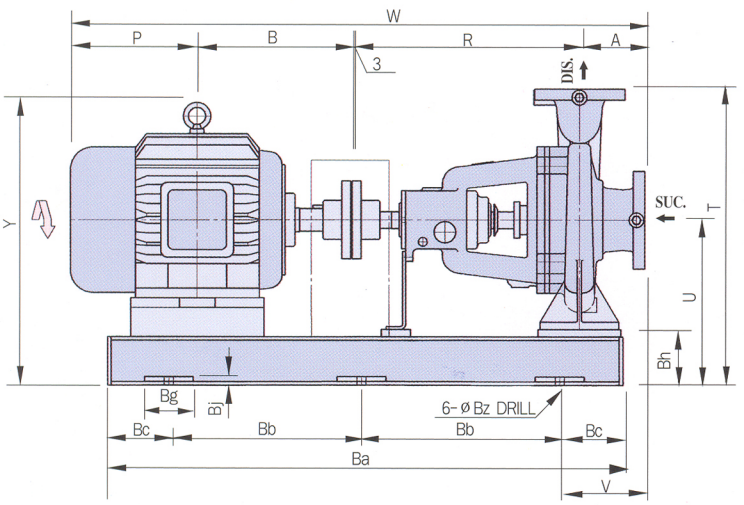

Fig "B"

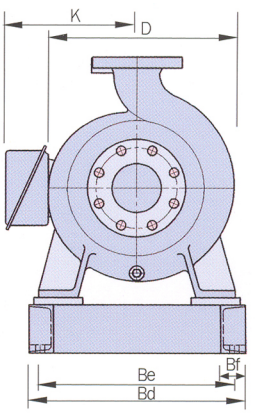

Fig "A" & "B"

TYPE	MOTOR		SIZE(mm)											COMMON(mm)										WEIGHT(kg)		
	Kw	FIG	A	B	D	K	P	R	T	U	V	W	Y	Ba	Bb	Bc	Bd	Be	Bf	Bg	Bh	Bj	Bz	PUMP	MOTOR	BASE
EHP 40A	1.5	A	80	169	207	158	159	430	377	217	150	841	317	750	500	125	280	245	40	80	85	15	15	32	24	32
	2.2			187		199	169				175	869	362	800	500	150									32	36
	3.7			200		199	182				175	895	387	800	500	150									39	36
	5.5			239		217	205		402	242	200	957	427	900	550	175	315	270	50	100	110	18	19		56	44
	7.5			259		217	224				200	996	427	900	550	175									70	44
EHP 40B	1.5	A	80	169	260	158	159	470	425	245	175	881	345	800	500	150	280	245	40	80	85	15	15	40	24	36
	2.2			187		199	169				175	909	390	850	550	150									32	40
	3.7			200		199	182				175	935	415	850	550	150									39	40
	5.5			239		217	205		450	270	200	997	455	900	550	175	315	270	50	100	110	18	19		56	44
	7.5			258		217	224				200	1035	455	900	550	175									70	44
	11	B		323		273	270				150	1146	490	1050	400	125	365	320							108	56
	15			345		273	292				150	1190	490	1050	400	125									136	56
EHP 50A	1.5	A	80	169	228	158	159	430	377	217	145	841	317	750	500	125	270	235	40	80	85	15	15	36	24	32
	2.2			187		199	169				170	869	362	800	500	150									32	36
	3.7			200		199	182				170	895	387	800	500	150	280	245							39	36
	5.5			239		217	205				170	957	402	850	550	150	315	280							56	40
	7.5			259		217	224				170	996	402	850	550	150									70	40

※치수는 참고용임.

EHP Series

TYPE	MOTOR		SIZE(mm)											COMMON(mm)										WEIGHT(kg)		
	Kw	FIG	A	B	D	K	P	R	T	U	V	W	Y	Ba	Bb	Bc	Bd	Be	Bf	Bg	Bh	Bj	Bz	PUMP	MOTOR	BASE
EHP 50B	1.5	A	100	169	268	158	159	470	425	245	195	901	345	800	500	150	295	260	40	80	85	15	15	45	24	36
	2.2			187		199	169				195	929	390	850	550	150									32	40
	3.7			200		199	182				195	955	415	850	550	150									39	40
	5.5			239		217	205		450	270	220	1017	430	900	550	175	315	270	50	100	110	18	19		56	44
	7.5			258		217	224				220	1056	430	900	550	175									70	44
	11	B		323		273	270				170	1166	490	1050	400	125	365	320							109	56
	15			345		273	292				170	1210	490	1050	400	125									136	56
	19			352		297	295		470	290	195	1220	516	1100	400	150	405	360			130				161	60
	22			371		297	314				195	1258	516	1100	400	150									177	60
	30			377		331	331				170	1281	516	1150	450	125									250	64
EHP 50C	1.5	A	100	169	340	158	159	470	490	265	180	901	365	800	500	150	350	315	40	80	85	15	15	72	24	36
	2.2			187		199	169				180	929	410	850	550	150									32	40
	3.7			200		199	182				180	955	435	850	550	150									39	40
	5.5			239		217	205				205	1017	475	950	600	175									56	48
	7.5			259		217	224		515	290	205	1055	475	950	600	175	350	305	50	100	110	18	19		70	48
	11			323		273	270				155	1166	510	1050	400	125									109	56
	15	B		345		273	292				155	1210	510	1050	400	125	365	320							136	56
	19			352		297	295				180	1220	536	1100	400	150									161	60
	22			371		297	314				180	1258	536	1100	400	150	405	360							177	60
	30			377		297	331				155	1281	536	1150	450	125									250	64
EHP 65B	1.5	A	100	169	286	158	159	470	445	245	195	901	345	800	500	150	295	260	40	80	85	15	15	56	24	36
	2.2			187		199	169				195	929	390	850	550	150									32	40
	3.7			200		199	182				195	955	415	850	550	150									39	40
	5.5			239		217	205		470	270	220	1017	455	900	550	175	315	270	50	100	110	18	19		56	44
	7.5			258		217	224				220	1055	455	900	550	175									70	44
	11	B		320		273	270				170	1163	490	1050	400	125	365	320							109	56
	15			345		273	292				170	1210	490	1050	400	125									136	56
	19			352		297	295		490	290	195	1220	516	1100	400	150	405	360			130				161	60
	22			371		297	314				195	1258	516	1100	400	150									177	60
EHP 65C	1.5	A	100	169	340	158	159	470	490	265	180	901	365	800	500	150	350	315	40	80	85	15	15	72	24	36
	2.2			187		199	169				180	929	410	850	550	150									32	40
	3.7			200		199	182				180	955	435	850	550	150									39	40
	5.5			239		217	205		515	290	205	1017	475	950	600	175	350	305	50	100	110	18	19		56	48
	7.5			259		217	224				205	1055	475	950	600	175									70	48
	11	B		323		273	270				155	1166	510	1050	400	125	365	320							109	56
	15			345		273	292				155	1210	510	1050	400	125									136	56
	19			352		297	295				180	1220	536	1100	400	150	405	360							161	60
	22			371		297	314				180	1258	536	1100	400	150									177	60
	30			377		297	331				155	1281	536	1150	450	125									250	64
EHP 80B	2.2	A	100	187	326	199	169	470	490	265	180	929	410	850	550	150	350	315	40	80	85	15	15	78	32	40
	3.7			200		199	182				180	955	435	850	550	150									39	40
	5.5			239		217	205		515	290	205	1017	475	950	600	175	350	305	50	100	110	18	19		56	48
	7.5			258		217	224				205	1055	475	950	600	175									70	48
	11	B		323		273	270				155	1166	510	1050	400	125	365	320							109	56
	15			345		273	292				155	1210	510	1050	400	125									136	56
	19			352		297	295				180	1220	536	1100	400	150	405	360	50	100	110	18	19		161	60
	22			371		297	314				180	1258	536	1100	400	150									177	60
	30			377		331	331				155	1281	536	1150	450	125									250	64
EHP 80C	2.2	A	100	187	364	199	169	500	560	310	185	959	455	900	550	175	390	345	50	100	110	18	19	80	32	44
	3.7			200		199	182				185	985	480	900	550	175									39	44
	5.5			239		217	205				185	1047	495	950	600	175									56	48
	7.5			258		217	224				195	1086	495	950	600	175									70	48
	11	B		323		273	270				165	1196	530	1100	400	150									109	60
	15			345		273	292				165	1240	530	1100	400	150									136	60
	19			352		297	295				140	1250	556	1150	450	125	405	360							161	64
	22			371		297	314				140	1288	556	1150	450	125									177	64

※치수는 참고용임.

TYPE	MOTOR		SIZE(mm)											COMMON(mm)										WEIGHT(kg)		
	Kw	FIG	A	B	D	K	P	R	T	U	V	W	Y	Ba	Bb	Bc	Bd	Be	Bf	Bg	Bh	Bj	Bz	PUMP	MOTOR	BASE
EHP 80C	30	B	100	377	364	331	331	500	560	310	165	1311	556	1200	450	150	405	360	50	100	110	18	19	80	250	68
	37			396		331	351				165	1350	556	1200	450	150	450	405							277	68
	45			432		449	385		615	365	140	1420	657	1250	500	125	465	405	65	130	165	20	23	80	380	72
	55			445		449	397				140	1445	657	1250	500	125									420	72
EHP 80D	11	B	125	323	430	273	270	510	615	335	185	1231	555	1100	400	150	430	385	50	100	110	18	19	82	109	60
	15			345		273	292				185	1275	555	1100	400	150									136	60
EHP 100B	45	B	125	432	349	410	385	542	595	345	190	1487	637	1250	500	125	465	405	65	130	165	20	23	95	380	72
EHP 100C	11	B	125	323	390	273	270	500	615	335	185	1221	555	1100	400	150	430	385	50	100	110	18	19	91	109	60
	15			345		273	292				185	1265	555	1100	400	150									136	60
EHP 100D	11	B	125	323	125	273	270	510	675	360	205	1191	580	1100	400	150	430	385	50	100	110	18	19	102	109	60
	15			345		273	292				205	1235	580	1100	400	150									136	60
	19			352		297	295				180	1245	606	1150	450	125									161	64
	22			371		297	314				180	1283	606	1150	450	125									177	64
	30			377		331	331				205	1306	606	1200	450	150									250	68
	37			396		331	351				205	1345	655	1200	450	150	450	405							277	68
EHP 125B	2.2	A	125	187	430	199	169	542	590	310	215	1026	455	900	550	175	390	345	50	100	110	18	19	95	32	44
	3.7			200		199	182				215	1052	480	900	550	175									39	44
	5.5			239		217	205				240	1114	495	1000	600	200									56	52
	7.5			258		217	224				240	1153	495	1000	600	200									70	52
EHP 125C	5.5	B	140	239	140	217	205	510	615	335	180	1097	520	1050	400	125	430	385	50	100	110	18	19	101	56	56
	7.5			258		217	224				180	1136	520	1050	400	125									70	56
	11			323		273	270				205	1246	555	1100	400	150									109	60
	15			345		273	292				205	1290	555	1100	400	150									136	60
	19			352		297	295				180	1300	581	1150	450	125									161	64
	22			371		297	314				180	1338	581	1150	450	125									177	64
	30			377		331	331				205	1361	581	1200	450	150									250	68
	37			396		331	351				205	1400	630	1200	450	150	450	405							277	68
EHP 125E	22	B	140	371	140	305	314	530	745	390	180	1359	636	1200	450	150	530	485	50	100	110	18	19	110	177	68
	30			377		338	331				180	1382	636	1200	450	150									250	68
EHP 150B	2.2	A	140	187	140	199	169	510	675	360	225	1009	505	900	550	175	430	385	50	100	110	18	19	100	32	44
	3.7			200		199	182				225	1035	530	900	550	175									39	44
	5.5			239		217	205				250	1097	545	1000	600	200									56	52
	7.5			258		217	224				250	1136	545	1000	600	200									70	52
EHP 150C	11	B	140	323	140	273	270	510	715	360	205	1246	580	1100	400	150	430	385	50	100	110	18	19	125	109	60
	15			345		273	292				205	1290	580	1100	400	150									136	60
	19			352		297	295				180	1300	606	1150	450	125									161	64
	22			371		297	314				180	1338	606	1150	450	125									177	64
	30			377		331	331				205	1361	606	1200	450	150									250	68
	37			396		331	351				205	1400	655	1200	450	150	450	405							277	68
	45			432		449	385		740	385	180	1470	707	1250	500	125	465	405	65	130	135	20	23		380	72
	55			445		449	397				180	1495	707	1250	500	125									420	72
EHP 150D	7.5	B	140	258	140	217	224	557	745	390	200	1155	575	1100	400	150	530	485	50	100	110	18	19	182	70	60
	11			323		273	270				200	1266	610	1200	450	150									109	68
	15			345		273	292				200	1310	610	1200	450	150									136	68
	19			352		297	295		770	415	175	1320	661	1250	500	125	530	470	65	130	135	20	23		161	72
	22			371		297	314				175	1358	661	1250	500	125									177	72
	30			377		331	331				155	1381	661	1250	500	125									250	72
	37			396		331	351				200	1420	710	1300	500	150									277	72
	45			432		449	385				175	1490	737	1350	550	125									380	80
	55			445		449	397				175	1515	737	1350	550	125									420	80

※치수는 참고용임.

2005. 09 - EP - 04

"
인터넷 http://www.sspump.com에 들어오시면
신신기계에 관한 모든것을 경험할 수 있습니다.
"

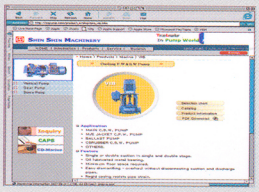

SHIN SHIN
MACHINERY CO., LTD.

Head Office & Factory

940-13 Yerimri, Chonggwan, Gijang, Pusan, Korea.

Phone: (051)727-5300~4

Telefax: (051)727-5305~8

Seoul Office

Phone: (02)752-8419/8403, 778-8832

Telefax: (02)755-3156

Home Page: http: //www.sspump.com

E-mail: webmaster@sspump.com